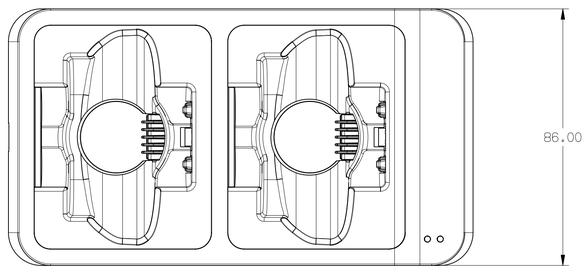

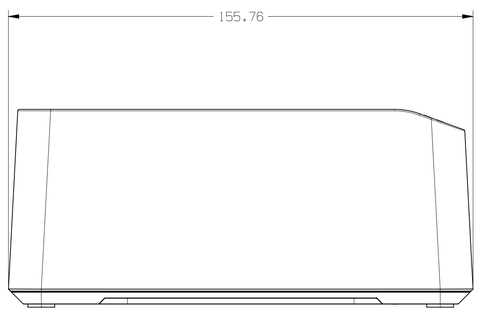

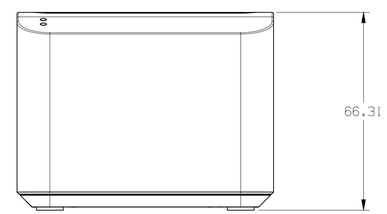

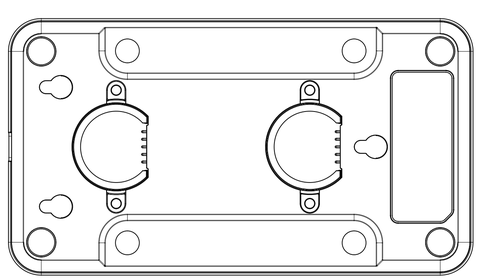

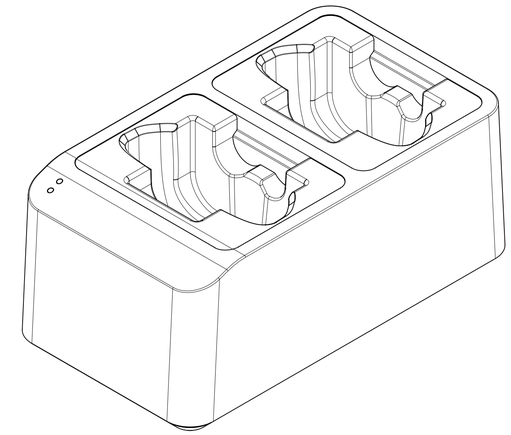

DRAWING NO:
MARKETING SBC203

REVISION RECORD

REV	ECO / PROCESS NUMBER	DESCRIPTION OF CHANGE NAME MM/DD/YYYY	CHECKED

SHURE
SHURE INCORPORATED
5800 W TOUHY AVENUE
NILES, IL 60714-4608
847-600-2000
WWW.SHURE.COM

CONFIDENTIAL
© XXXX-XXXX SHURE INCORPORATED

3RD ANGLE

DRN: FOURNIW	04/14/2020	TOL: 1 PL ± .13
CHK: X XXX	MM/DD/YYYY	2 PL ± .25
APP: N/A	MM/DD/YYYY	∠ ± 1°

NOTES: · NX CAD MODEL - DO NOT SCALE
· MUST CONFORM TO ENVIRONMENTAL COMPLIANCE SPEC - 6A27B
· ALL DIMENSIONS IN mm UNLESS OTHERWISE SPECIFIED

N O T I C E

THIS DRAWING IS THE PROPERTY OF SHURE INCORPORATED AND IS DISCLOSED TO YOU IN STRICT CONFIDENCE AND WITH THE UNDERSTANDING THAT IT IS NOT TO BE REPRODUCED, COPIED, OR USED EXCEPT FOR THE PURPOSE OF PRODUCING TOOLS OR PRODUCTS EXCLUSIVELY FOR SHURE INCORPORATED. COPIES OF THIS DRAWING ARE TO BE MADE ONLY WHEN NECESSARY FOR THE PURPOSE STATED ABOVE AND ALL COPIES MUST CONTAIN THIS NOTICE. THIS DRAWING AND ALL COPIES MUST BE RETURNED ON REQUEST.

DESCRIPTION:
MARKETING ASSEMBLY CHARGER SBC203

MATL:	FINISH:
N/A	N/A

DWG NO:	REV	SIZE
MARKETING SBC203	00	D

PROJ: 17833A	SCALE: 1:1	SHEET: 1 OF 1